RIELLO ELETTRONICA

REVISIONS				
REV	DESCRIPTION	ENGINEER	REQUIRE	DATE
A	New Edition			
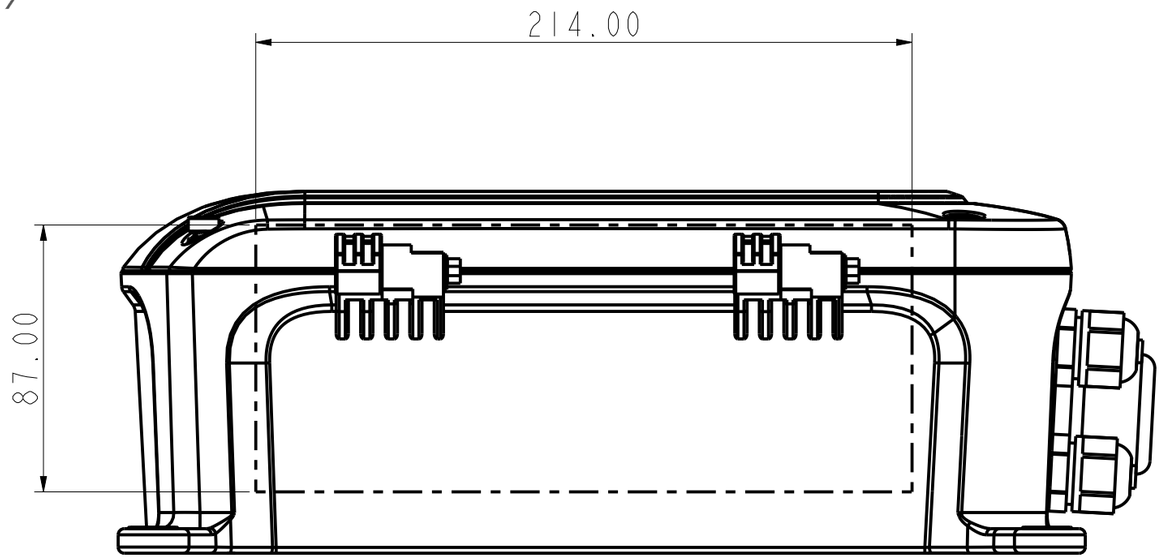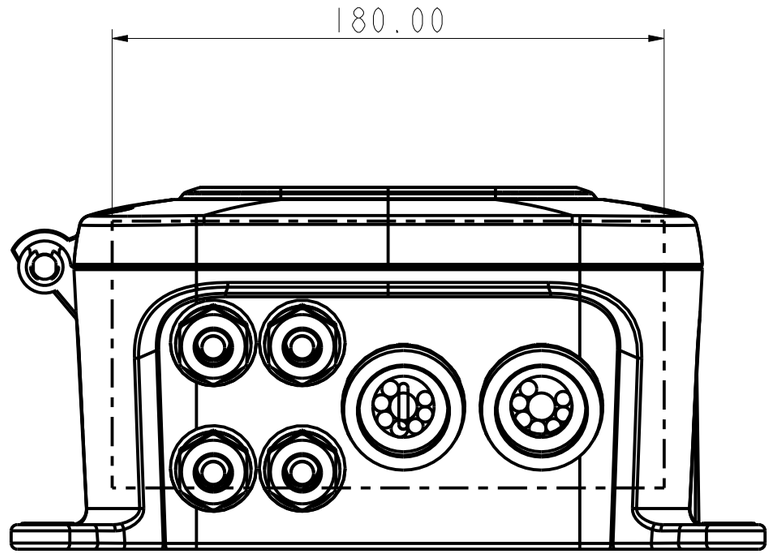
IPAET920 (JB-200)